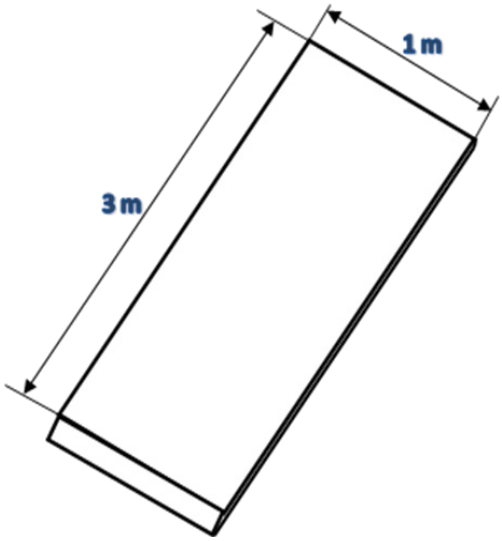
1 m
3 m